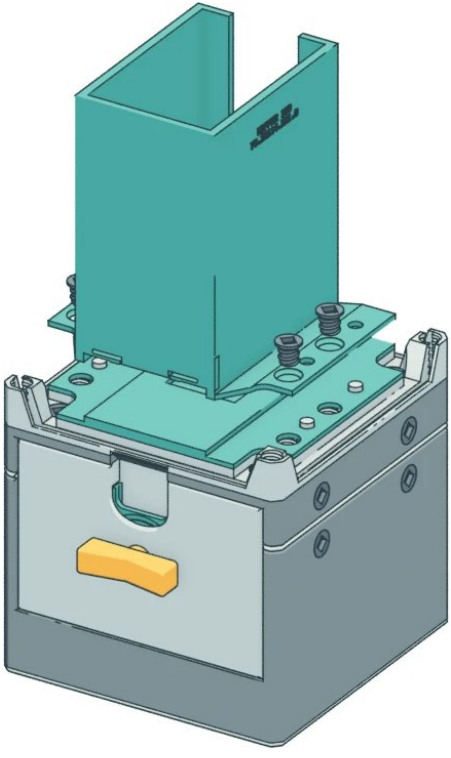

STEP 27

Fit the hopper

Remove any breakaway supports from the hopper spring tabs. Lower the hopper onto the same alignment pins as the track. Secure it with 4 standard screws in the threaded holes. The hopper holds the track down.

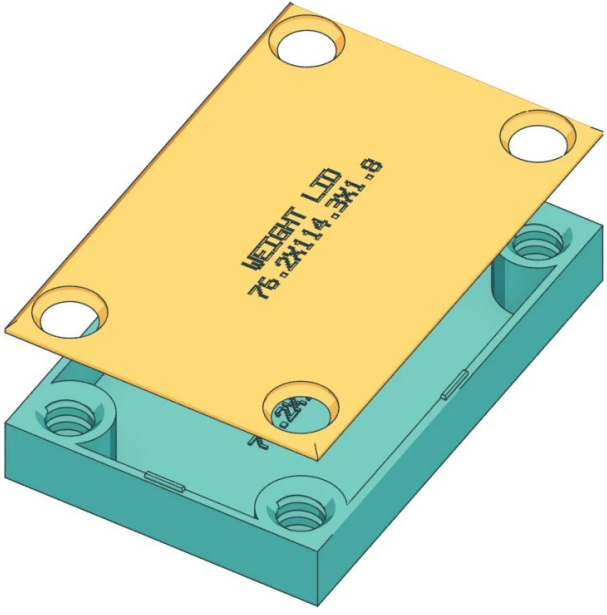

STEP 28

Prepare the follower weight

If using the follower weight, fill its box with sand or steel bearing balls. Seat the lid flush and fit 4 standard screws.

Optional. Recommended for sticker sleeves and top loaders without bumper.

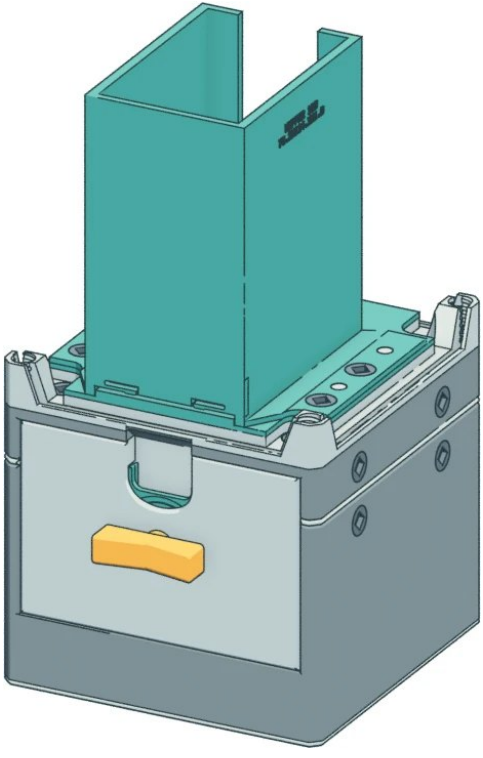

STEP 29

Test before fitting the panels

Stack a few items flat in the hopper, just as you plan to vend them. If using a follower weight, set it on top. Insert a token and turn the handle.

One item should exit and the pusher should return. If it catches, check the wheel arrows, pusher pin, and track alignment before continuing. If you need help with those checks, contact Moxx.

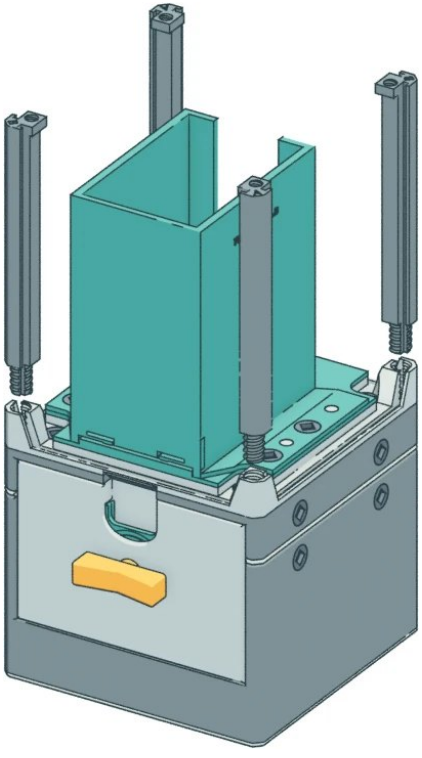

STEP 30

Install the four uprights

Match A and B on the four uprights to the letters on their corner sockets. Thread each upright in until the panel grooves line up. Matching letters sit diagonally across from each other.

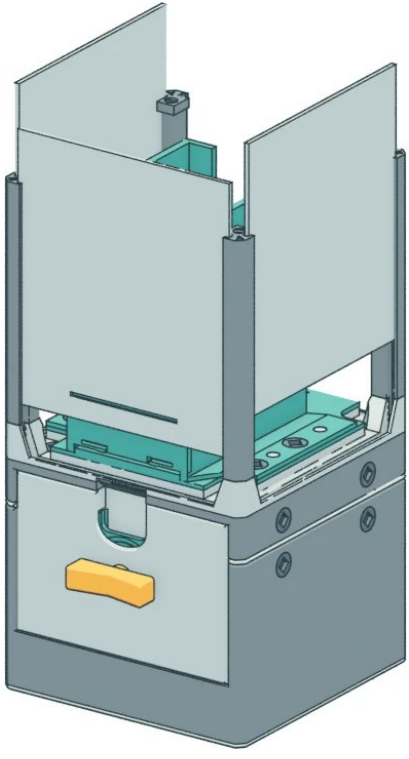

STEP 31

Fit the front and side panels

Slide the slotted front panel into the grooves above the coin mechanism. Install two blank side panels. Seat the bottom edges fully in their grooves. Leave the back open for loading.

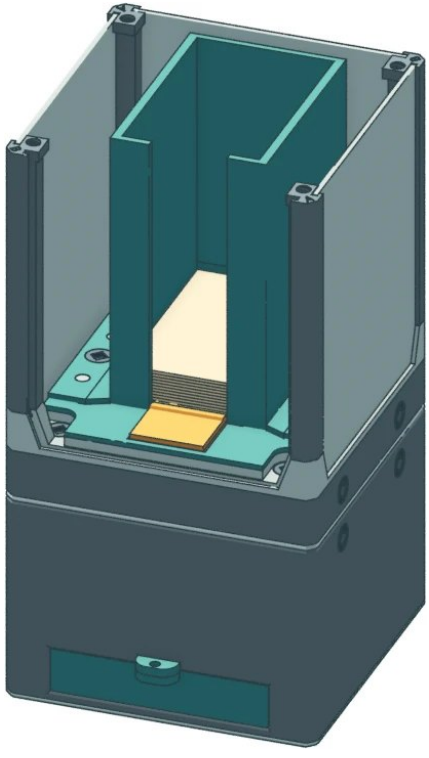

STEP 32

Load your items and close the back

Stack your items flat in the hopper through the open back. If using the follower weight, set it on top. Slide the third blank panel into place.

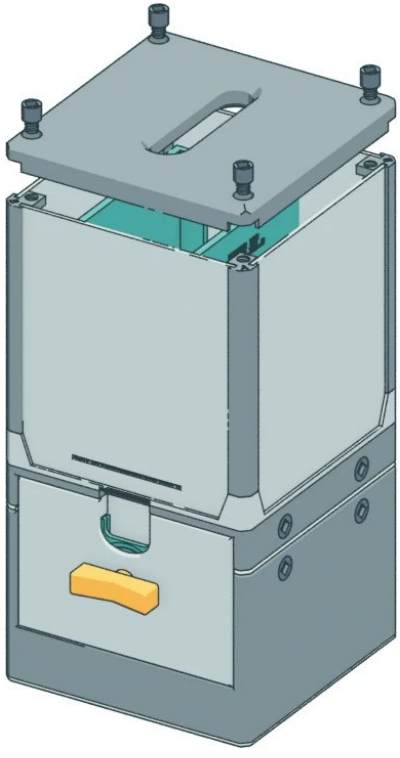

STEP 33

Secure the lid

Nest the lid on all four uprights. Secure the corners with 4 lid screws. Stop once each is snug.